USER MANUAL

SIP STARTMASTER® 2500A 12V LITHIUM JUMP STARTER

ITEM NO: 07221

PLEASE READ AND FULLY UNDERSTAND THE INSTRUCTIONS IN THIS MANUAL BEFORE OPERATION.
KEEP THIS MANUAL SAFE FOR FUTURE REFERENCE.

Contents

1 Introduction **3**
1.1 Product Overview 3
1.2 Manual Version History 4

2 Warranty **5**

3 Safety Instructions **6**
3.1 Safety Symbols Used Throughout This Manual 6
3.2 Safety Instructions 6

4 Electrical Connections **11**

5 Technical Specifications **13**
5.1 Safety Features 14

6 Getting to know your SIP STARTMASTER® 2500A 12V Lithium Jump Starter **15**
6.1 Accessories 16

7 Operating Instructions **17**
7.1 Charging the Lithium Booster 17
7.2 Jump Starting a Vehicle Using the 07221 SIP STARTMASTER® 2500A 12V Lithium Jump Starter 18
7.3 Operating the Work Light 19
7.4 Using USB-A 5 V Power Output 19
7.5 Boost Lock Out and Duration Override 20

8 Maintenance **22**
8.1 Care Instructions 22
8.2 Disposal 22
8.3 Battery Maintenance 22

9 Troubleshooting **24**
9.1 Exploded Drawing and Parts List 27

10 UK - Declaration of Conformity **29**

11 EU - Declaration of Conformity **30**

12 Notes **31**

1 Introduction

Thank You for Choosing SIP

SIP Industrial Products Ltd is a flagship supplier of high-quality machinery and equipment to the ever-growing engineering, construction, automotive and agricultural marketplaces.

As an ISO9001 approved machinery specialist, we are passionate about innovation and offering quality, value and choice, making sure that our users have the most appropriate and reliable product for the task at hand.

Welcome to Your User Manual

This manual is designed to introduce the support in place for you as an SIP customer as well as guide you through the product that you have purchased and how to use and maintain it safely and effectively.

Technical and Aftersales Support

With a dedicated service centre at head office and service engineers across the UK and Ireland, SIP are committed to providing you with the optimum support to minimise any working downtime.

Our extensive Technical, Service Engineer and Customer Service teams are on hand to support with:

- Product selection
- Servicing and maintenance advice
- Troubleshooting

Feel free to contact us for more information.
Tel: 01509 500 400
Email: customerservice@sip-group.com

1.1 Product Overview

SIP STARTMASTER® 2500A 12V Lithium Jump Starter is designed for boost-starting of a range of vehicles quickly and efficiently using powerful Lithium batteries in a compact and lightweight casing that is easily portable in use and stored when not needed.

With high boost and cranking rates for 12V vehicle batteries plus a 5V USB output suitable for charging electronics and devices, it provides a total starting solution. It is completed with a Battery Management System (BMS), engine cranking timer, insulated ergonomic clamps and automatic cut-out to protect batteries from overloading.

1.2 Manual Version History

Manual Version Number	Date Published
V1.2	28/05/2026

2 Warranty

Warranty Registration

SIP proudly offer a 2 year warranty across all SIP branded machines.*

To benefit from the second warranty year, you must register within 30 days of purchase via the link or QR code below.

www.sip-group.com/warranty/register-warranty

***Excludes accessories and consumables**

3 Safety Instructions

3.1 Safety Symbols Used Throughout This Manual

Important: Please read the following instructions carefully, failure to do so could lead to serious injury, damage to the product or an invalidated warranty.

Danger/Caution: Indicates risk of personal injury and/or the possibility of damage.

Warning: Indicates risk of fire.

Warning: Indicates risk of electrocution.

Note: Supplementary Information.

3.2 Safety Instructions

When using this lithium powered booster, basic safety precautions should always be followed to reduce the risk of fire, electric shock, personal injury (or to others) and/or damage to the product. Read all of these instructions before operating the item and save this user manual for future reference. SIP recommends that this product should not be modified or used for any application other than that for which it was designed; it was designed to supply an external power source to boost start a vehicle with a flat or damaged internal battery. If you are unsure of its relative applications do not hesitate to contact us and we will be more than happy to advise you.

3.2.1 General Safety Principles

Prior to first use read and understand this owner's manual and the labels affixed to the lithium powered booster. Learn its applications and limitations, as well as the potential hazards specific to it. Only trained and competent individuals may operate this lithium powered booster, and **must** follow the instructions provided in this manual. **Never** operate the lithium powered booster under the influence of alcohol, drugs, or medication. Children under the age of 16 years or people unfamiliar with the lithium powered booster **must not** be allowed to use it.

Keep all safety guards and covers in place and functional, and **do not** bypass, disable, or

modify any safety guards, safety devices or warning system. When operating the lithium booster ensure that it is on a flat, level surface so that the display is easily readable during use. **Do not** balance on unstable surfaces such as the engine block, that may cause the lithium booster to move or drop during use or when the engine starts. Ensure that jump cables from the lithium booster are securely attached to the vehicles battery terminals during use. When the vehicle engine starts there will be vibrations and moving parts (such as auxiliary belts and radiator fans) that were stationary prior to the engine starting. Ensure that the lithium booster and/or leads cannot fall into these moving parts or onto a hard surface once the engine starts.

Visually examine the jump leads for signs of damage to the clamps and insulation before each use. If damage to either is found, take the unit out of service immediately and contact SIP Customer Service. **Always** check the vehicle handbook or servicing information to see whether it is safe to use this product with the vehicles electrical circuit, paying particular attention to what voltage the vehicle's electrical system operates at. Using a lithium booster that supplies the incorrect voltage to a vehicle's electrical systems during a boost can cause catastrophic damage to the vehicle's electrical circuit and onboard computers (ECU).

This lithium booster is not designed for use in wet environments and must be kept dry at all times and must **never** be submerged in water. Do not charge the lithium booster in a wet or damp environment.

3.2.2 Personal Protective Equipment

Personal Protective Equipment (PPE) **must** be worn during operation of the lithium booster and personal metal items such as rings, bracelets, necklaces, and watches **must** be removed when working with a vehicle's lead acid battery that is going to be boosted. A lead acid battery can produce a short circuit current high enough to weld a ring or other metallic jewellery to metal on the battery terminals or car chassis, causing a severe burn.

Eye protection and insulating gloves must **always** be used when using the lithium booster to start a vehicle. It is recommended that suitable controls are in place to mitigate against potential lithium battery fires such as, but not limited to, having a lithium fire blanket, lithium safety bins and lithium battery charging cabinets.

3.2.3 Hazards During Use

Fire and Explosion Hazards: This lithium booster uses a lithium battery, and it is designed to boost vehicles that typically have or contain a lead acid battery. Lead acid batteries generate explosive gases when charging, are overcharged or damaged. When connecting or disconnecting jump leads from the lithium booster to the vehicle's battery, sparks may be generated from arcing between the jump lead and the battery terminal; due to the risk of these sparks igniting possible explosive gases only use the lithium

booster in a well ventilated area. **Do not** attempt to use the lithium booster to start a vehicle around fuel vapours as the sparks/heat may cause a fire.

Lithium batteries are hazardous items and although they are contained in many electrical products, they pose a fire risk capable of causing significant damage and potential loss of life. This is in part due to a 'thermal runaway' event, which is when a lithium battery begins a self-sustaining uncontrolled heating process that leads to a fire and emission of toxic gases. These fires are incredibly difficult to extinguish. These thermal runaway events are typically caused by internal short circuits, physical damage/abuse, overhandling, use of incorrect charger, or excessive internal heat caused by large discharge events.

Burn Hazards: The sparks potentially generated during the connection of the jump leads to the battery terminals may burn the user on contact. Ensure that the correctly rated PPE is worn to protect the user's eyes and skin from these sparks.

Electrical Hazards: This lithium booster is not designed to replace the vehicle battery, **do not** attempt to boost start a vehicle that does not have a lead acid battery fitted. **Never** attempt to boost a vehicle with a frozen lead acid battery. **Always** consult the vehicle handbook on whether the vehicle is positively or negatively earthed before connecting the jump leads.

Never allow the red and black clamp cables of the lithium booster to come into contact with each other or allow them to contact a common conductor. The lithium booster internal battery stores a large amount of energy, short circuiting the vehicle battery or booster terminals will cause the battery to attempt to release the energy immediately. This may damage the unit, damage the vehicle electronics, cause a fire or personal injury/death by electrocution.

When charging the lithium booster from a mains electrical supply, **only** use the charger supplied with the lithium booster. Using a non-original charger may cause overcharging of the lithium booster, leading to a fire. **Never** attempt to boost a vehicle whilst the lithium booster is being charged from a mains electrical supply.

Do not use the product if the jump leads are damaged. **Always** visually inspect the leads before each use and keep leads away from heat, oil and sharp edges/surfaces. Repeated use of the product will cause the leads to get hot despite the boost lockout (see Section 3.2.5). If they become hot to touch, allow to cool before further use.

Chemical Hazards: The lithium battery used in this booster is sealed, however damage may cause certain elements to escape, such as the electrolyte. These compounds are hazardous and if it is suspected that they are leaking, the unit should immediately be taken out of service and the local fire service called to attend.

3.2.4 Residual Risks

Damage from knocks, drops and other impacts may occur internally that are not visible from the exterior of the lithium booster. If these events occur the unit must immediately be taken out of service and sent to an approved SIP Service Agent for inspection. Failure

to have the unit inspected may lead to a thermal runaway event as described above.

3.2.5 Safety Devices

The 07221 SIP STARTMASTER® 2500A 12V Lithium Jump Starter is installed with the following safety devices:

Battery Management System (BMS) The lithium booster's BMS allows for the system to operate with more control, alerting the user to issues such as excessive temperature or voltage detection, and stopping the boost process if necessary.

Boost Duration and Lock Out The lithium booster will only allow a boost to take place for a maximum of 5 seconds, with a cool down period of three minutes. This is to allow the battery to cool and prevent deep discharge damage to it.

Insulated Clamps The clamp covers have been designed to offer maximum protection against electric shock through ergonomics and material selection. Also offering protection against short circuit from the shape of the insulation covering which makes it quite difficult to connect the metal ends of the clamps.

LED Work Light The provision of a light allows the user to operate the booster safely and with ease in the dark, e.g. ensuring that the clamps are connected securely. It additionally allows the user to signal in emergencies due to the different modes (e.g. strobe, SOS).

Hard Plastic Case The hard plastic outer case protects both the Lithium batteries and all the internal electronics from damage due to shock. It also reduces electric shock or electrocution hazards.

3.2.6 Maintenance and Servicing Safety

This lithium booster is not designed to be serviced by the end user and must only be serviced by an authorised SIP Service Agent. **Do not** attempt to open the unit to access the components inside and **do not** attempt to replace any of the lithium boosters components.

To prolong the life of the battery contained within the lithium booster pack **always** ensure that it is charged as per the instructions in Section 7.1 and Section 8.3 of this manual.

3.2.7 Disposal Safety

As this product contains lithium batteries, it should not be disposed of in normal household waste or recycling. Please contact your local household recycling authority for advice. Lithium batteries can be extremely volatile when damaged, therefore it is not recommended to attempt to disassemble this product in order to separate the batteries

or its electronics.

3.2.8 Storage

When the lithium booster is not in use, store it with the jump lead clamps firmly attached to the receiving lugs on the body of the unit. Store in a confined, clean, dry, and ventilated area, and out of reach of children and unauthorized persons. The lithium booster **must not** be allowed to exceed temperatures of 50°C.

4 Electrical Connections

WARNING! It is the responsibility of the owner and the operator to read, understand and comply with the following:

You must check all electrical products, before use, to ensure that they are safe.

You must inspect power cables, plugs, sockets and any other connectors for wear or damage.

You must ensure that the risk of electric shock is minimised by the installation of appropriate safety devices; a Residual Current Circuit Breaker (RCCB) should be incorporated in the main distribution board. We also recommend that a Residual Current Device (RCD) is used. It is particularly important to use an RCD with portable products that are plugged into a supply which is not protected by a Residual Current Breaker with Over-Current (RCBO). If in any doubt consult a qualified electrician.

Never carry this product by the mains lead or pull it to remove the plug from the mains socket. Keep the mains lead away from heat, oil and sharp edges. If the mains lead is damaged, it must be replaced by the manufacturer, its service agent or a similarly qualified person in order to avoid unwanted hazards. **Always** disconnect from the power supply when not in use.

Danger/Caution: The wires in the power cable of this product are coloured in accordance with the following code: Blue = Neutral, Brown = Live, Yellow and Green = Earth.

This appliance is fitted with a plug which is moulded onto the electric cable (i.e. non-rewirable) please note:

1. If the supply cord is damaged, it must be replaced by the manufacturer, its service agent or similarly qualified persons in order to avoid a hazard.
2. Never use the plug without the fuse cover fitted.
3. Should you wish to replace a detachable fuse carrier, ensure that the correct replacement is used (as indicated by marking or colour code).
4. Replacement fuse covers can be obtained from most electrical stockists.
5. The fuse in the plug must be replaced with one of the same rating (13 A) and this replacement must be ASTA approved to BS1362.

Warning: Never connect live or neutral wires to the earth terminal of the plug. Only fit an approved plug with the correct rated fuse. If in doubt consult a qualified electrician.

Note: Always make sure the mains supply is of the correct voltage and amperage and the correct fuse protection is used. In the event of replacing the fuse, always replace the fuse with the same value as the original.

Note: If an extension lead is required in order to reach the mains supply; ensure that this too is rated for the correct voltage and fuse rating.

Note: The cross section of the extension lead should be checked so that it is of sufficient size to reduce the chances of voltage drops.

5 Technical Specifications

Parameter	Value
Output Voltage	12 V
Peak Current	2500 A
Cranking Current (CA)	700 A
Battery Technology	$LiFePO_4$
Battery Capacity	4.0 Ah at 12.8 V DC; 16000 mAh at 3.2 V DC; 51.2 Wh
Jump Lead Length	450 mm
Input Supply (Charging)	15 V DC; 1 A
USB-A Output	1 x 5 V DC; 2.4 A
DC (Peripheral) Output	1 x 12 V DC; 8 A
Operating Temperature Range	-10°C - 45°C
Charging Temperature Range	0°C - 45°C
Storage Temperature Range	-20°C - 60°C
Net Weight	1.8 kg (booster only)
Gross Weight	2.1 kg
Product Dimensions	(H)225 x (W)240 x (D)90 mm
Packaged Dimensions	(H)237 x (W)253 x (D)104 mm

5.1 Safety Features

Item	Description
Over-Voltage Protection	Stops function when excessive voltage is detected and displays an error code (E02) to stop damage to the battery.
Overload Protection	Stops function when low voltage (7 V) is detected and displays an error code (E04) to stop damage to the battery.
Over-Temperature Protection	Stops function when excessive temperature is detected (50°C) to stop damage to electronics and/or battery.
Short Circuit	Stops function when the voltage at the clamps is lower than 6 V when in operation to avoid damage from short circuit.
Boost Lock Out and Duration	Limits the boost duration to 5 seconds and stops the ability to boost for 3 minutes to allow the unit to cool down.

6 Getting to know your SIP STARTMASTER® 2500A 12V Lithium Jump Starter

Figure 1: Getting to Know Your SIP STARTMASTER® 2500A 12V Lithium Jump Starter

Item	Description
1	Engine Start Button
2	12 V DC Output Port
3	Error LED
4	Status LED
5	Digital Screen
6	Voltage Display LED
7	Battery Percentage LED
8	AC Charging Port
9	USB-A Port
10	Operation Button (Test/Light/USB)
11	Red (Positive) Battery Clamp
12	LED Work Light
13	Black (Negative) Battery Clamp

6.1 Accessories

Quantity	Description
1	UK Mains Charger

7 Operating Instructions

Caution: Always ensure the Red (Positive) Battery Clamp (11) and Black (Negative) Battery Clamp (13) are connected securely to the vehicle's connection points and in the correct polarity before switching on the booster.

Danger: Never allow the Red (Positive) Battery Clamp (11) and Black (Negative) Battery Clamp (13) contacts to touch. This may cause a short circuit which could result in damage, fire, explosion and severe personal injury.

Danger: To avoid the risk of fire, combustion, and explosion, always operate and charge on a non-flammable surface and away from flammable substances and gases (e.g. petrol).

7.1 Charging the Lithium Booster

Always ensure the battery of the lithium booster is fully charged before use. See Section 8.1 for battery maintenance instructions. To check that the booster is charged, press the Operation Button (10) and consult the Digital Screen (5). The unit will cycle between displaying the battery voltage and charge percentage, the Voltage Display LED (6) and Battery Percentage LED (7) will illuminate depending on which information is being displayed.

To charge the internal battery:

- Check the battery level prior to charging following the steps above.
- Ensure the lithium booster is off and no devices are connected to the 12 V DC Output Port (2) and USB-A port (9) before connecting the charger.
- Plug the charger into the AC Charging Port (8) on the front panel.
- Plug the charger adaptor into a 230 V AC mains electrical supply outlet. The display panel will show "CHA" during the charging process. Do not charge from an unregulated power supply (e.g. a generator).
- Once fully charged, the display panel will show "FUL".
- On unplugging, the battery charge % will display briefly.
- Unplug the charger from the wall socket outlet and the AC Charging Port (8).
- If the charger is left connected it will charge to 100 % then stop charging. Once the internal battery voltage has dropped below 13.2 V the charging function will begin again.

Always ensure that the lithium booster is charged in a well ventilated area.

7.2 Jump Starting a Vehicle Using the 07221 SIP STARTMASTER® 2500A 12V Lithium Jump Starter

THIS PRODUCT IS RATED TO BE USED ON A VEHICLE WHICH HAS A 12 V BATTERY AND ELECTRICAL SYSTEM, PLEASE CHECK THIS BEFORE USE.

Note: Some classic vehicles or vehicles manufactured in certain parts of the world may use a positive earthing system, rather than the negative earthing system used in most vehicles. If you suspect that the vehicle is positively earthed please contact SIP Customer Support for advice on how to proceed.

- Turn off the vehicle ignition switch and all other function (lights, radio, etc.) before making any cable connections.
- Place the vehicle in neutral and apply the handbrake.
- Connect the Red (Positive) Battery Clamp (11) to the positive battery terminal on the vehicle.
- Connect the Black (Negative) Battery Clamp (13) to the chassis or a solid, stationary, metal vehicle component or vehicle body part. Be aware that vehicle batteries, especially lead-acid batteries, can release hydrogen gas. Connecting the negative clamp may create a small spark which is unsafe if the battery has released any hydrogen gas. Only connect the Black (Negative) Battery Clamp (13) directly to the negative battery terminal if you feel it is safe to do so. **Never** connect the clamp to a moving part.
- When the lithium booster is connected it will power on and the voltage of the vehicle's battery will display on the screen. The Status LED (4) will blink green and the Battery Percentage LED (7) will illuminate.
- To boost the vehicle press the Engine Start Button (1), a contactor inside the lithium booster will click and the Status LED (4) will illuminate a solid green. The unit will now display the voltage supplied from the lithium booster to the vehicle.
- Start the vehicle as normal.
- The lithium booster will allow a cranking period of 5 seconds before shutting off for 3 minutes to allow cool down, this prevents any damage to the battery or overheating of the vehicle.

- Deactivate the lithium booster by pressing the Engine Start Button (1) again to switch off. The unit will click indicating the contactor has closed.
- Disconnect the Black (Negative) Battery Clamp (13) first, then the Red (Positive) Battery Clamp (11), clamping both back onto the clamp holders on the lithium booster.
- The lithium booster will power off when disconnected from the terminals. However, if the Operation Button (10) has been pressed, it will need to be pressed again to power off the lithium booster.
- Recharge the lithium booster after each use.

If any errors display at any point throughout this process, **do not** proceed to activate the battery or continue use as this could cause serious damage or personal injury. See Section 9 for details of error codes and how to fix them.

7.3 Operating the Work Light

Press and hold the Operation Button (10) for 3 seconds to turn the work light on. This will turn the light on in 100% brightness mode initially. Press the Operation Button (10) again repeatedly within 5 seconds to cycle through the different work light functions: 100% brightness, 50% brightness, slow flash, strobe, SOS. The work light will auto power off after 8 hours or when the internal battery voltage is low. The work light can be left on when jump starting if required.

7.4 Using USB-A 5 V Power Output

The lithium booster provides a maximum power of 5 V, 2.4 A to an external USB-powered device.

- Press the Operation Button (10) on the front panel to check the battery voltage level and turn on the USB-A Port (9). Always ensure the lithium booster is sufficiently charged, even in USB mode.
- Plug the device to be charged into the USB-A Port (9).
- ”USB” will display when the USB mode is on and a device is charging from the lithium booster.
- Once the device has charged, unplug from the USB-A Port (9).
- The lithium booster will also require recharging after using on USB mode.

Please note that the USB power will shut off automatically after 30 seconds if a device is not plugged in, or when it has been on for over 8 hours, or when the internal battery voltage is too low.

7.5 Boost Lock Out and Duration Override

Warning: The boost lockout and duration feature is designed to prevent damage to the vehicle and lithium booster pack. Only override this feature when advised to do so by SIP Customer Service.

Danger: The lithium booster jump leads **MUST** be connected to the vehicle before activating the override. Once the override has been activated the jump leads will become live and must not be allowed to come into contact with conductive materials that will cause a short. The jump leads should also not be allowed to contact each other as they will arc.

Danger: Check the connections to the battery are correct and not reverse connected when using the boost lockout. This can cause a fire and/or explosion.

In rare occasions where the vehicle requires a longer period of time to crank, or the vehicle battery voltage is too low to open the lithium booster's relay, it is possible to override the boost lock out and duration feature to allow this. Using this override function to perform longer cranking cycles may cause permanent damage to the battery health, affecting future performance and voiding the warranty.

ONLY USE THE BOOST LOCK OUT AND DURATION OVERRIDE WHEN ADVISED TO BY SIP CUSTOMER SERVICE. THE JUMP LEADS MUST BE CONNECTED TO THE VEHICLE BEFORE THE OVERRIDE IS ACTIVATED AS THE LEADS WILL BECOME LIVE WHEN THE OVERRIDE IS ACTIVATED.

To use the lithium booster with the boost lock out and duration overridden, follow the below steps:

- Turn off the vehicle ignition switch and all other function (lights, radio, etc.) before making any cable connections.
- Place the vehicle in neutral and apply the handbrake.
- Connect the Red (Positive) Battery Clamp (11) to the positive battery terminal on the vehicle.
- Connect the Black (Negative) Battery Clamp (13) to the chassis or a solid, stationary, metal vehicle component or vehicle body part. Be aware that vehicle

batteries, especially lead-acid batteries, can release hydrogen gas. Connecting the negative clamp may create a small spark which is unsafe if the battery has released any hydrogen gas. Only connect the Black (Negative) Battery Clamp (13) directly to the negative battery terminal if you feel it is safe to do so. **Never** connect the clamp to a moving part.

- When the lithium booster is connected it will power on and the voltage of the vehicle's battery will display on the screen. The Status LED (4) will blink green and the Battery Percentage LED (7) will illuminate.
- To override the boost lock out and duration, press and hold the Battery Start Button (1) and a three second timer is displayed on the Display Screen (5). The unit will beep on the countdown of each second. Keep the Engine Start Button (1) pressed until the contactor clicks. Release the Engine Start Button (1), the boost lock out and duration has been overridden.
- Start the vehicle as normal.
- The lithium booster will allow a cranking period longer than 5 seconds and will not prevent use for 3 minutes to allow the unit to cool down.
- Deactivate the lithium booster by pressing the Engine Start Button (1) again to switch off. The unit will click indicating the contactor has closed.
- Disconnect the Black (Negative) Battery Clamp (13) first, then the Red (Positive) Battery Clamp (11), clamping both back onto the clamp holders on the lithium booster.
- The lithium booster will power off when disconnected from the terminals. However, if the Operation Button (10) has been pressed, it will need to be pressed again to power off the lithium booster.
- Recharge the lithium booster after each use.

REPEATED USE OF THE LITHIUM BOOSTER WITH THE OVERRIDE ACTIVE WILL CAUSE LONG TERM DAMAGE TO THE LITHIUM BATTERY AND VOID THE WARRANTY.

8 Maintenance

8.1 Care Instructions

Caution: To prevent serious injury, unplug the lithium booster and ensure the Engine Start Button (1) and all accessories (LED Work Light (12), etc.) are switched off, and the unit has cooled completely before carrying out any cleaning and inspection.

In order to prolong the life of the lithium booster pack the following care steps should be followed:

- Before each use and monthly when in storage, inspect the general condition of the unit. Check for loose hardware, misalignment or binding of moving parts, cracked or broken parts, damage or wear to the clamp electrical cables, leakage from batteries, or any other change in the unit or condition that may affect safe operation. If any unwanted changes are noticed, please contact SIP for advice.
- Keep the lithium booster clean and free of dirt, debris, and grease. Use a clean dry cloth to wipe clean the external surfaces.
- Keep the lithium booster out of sunlight and do not store in areas of high humidity.
- Do not store the lithium booster where the temperature will fluctuate drastically or in areas of extreme hot or extreme cold.
- Do not store the lithium booster near or around heavy or sharp items which may damage the product.

8.2 Disposal

As this product contains lithium batteries, it should not be disposed of in normal household waste or recycling. Please contact your local household recycling authority for advice. Lithium batteries can be extremely volatile when damaged, therefore it is not recommended to attempt to disassemble this product in order to separate the batteries, electronics etc prior to disposal.

8.3 Battery Maintenance

To maintain the battery health:

- Recharge every 30 days and after each use.
- Avoid storing the battery in areas where there are major temperature fluctuations as this can accelerate battery discharge.
- Check the unit before each use, and monthly during storage, for issues like battery leaks.
- Charge the unit with the provided charger. In the case that the charger is misplaced or damaged, contact SIP for replacement.
- **Never** use the booster if the internal battery is not fully charged, it may shut down under heavy loads if it cannot deliver sufficient voltage. This can lead to damage of the vehicle's electronics.
- Failure to keep the internal battery charged will lead to permanent battery damage and void the warranty.

9 Troubleshooting

Problem	Solution
The lithium boosters battery will not charge.	1. Ensure that all of the lithium boosters functions are switched off. 2. Ensure that the charger is properly connected to both the AC Charging Port (8) and the mains electrical supply socket outlet. Ensure that the socket outlet is functioning. 3. Ensure that the charger supplied with the lithium booster is being used. Check the charger for signs of damage. Never use a charger not supplied with this lithium booster to charge it.
The USB-A Port will not power connected devices.	1. Ensure that the Operation Button (10) is turned on to activate the USB function. 2. Check the manual of the device to be charged. Some devices may not be compatible with this type of charging. 3. Check that the lithium booster is fully charged, recharge if required.
LED Work Light (12) does not turn on.	1. Ensure the Operation Button (10) is turned on to activate the light function. 2. Check that the booster is fully charged, recharge if required.

Error Code	Cause	Corrective Action
E01	Reverse polarity	Check the positions of the clamps and swap their positions if required.
E02	Over-voltage protection	Disconnect the clamps and check the voltage of the car battery using a multimeter. If the voltage is fine, allow the car battery to cool down before retrying. Ensure that no other loads are connected and that the clamps are securely connected.
E03	Short circuit	Ensure that the clamps are not touching each other and that they are securely connected to the battery/chassis. Check the general condition of the booster and car battery.
E04	Overload	Check the charge of the lithium booster and recharge if required. The lithium batteries may be cold. The engine may be drawing too much current, check the specification of the car battery.
E05	Low-voltage protection	Check the charge of the lithium booster and recharge if required. The lithium batteries may be cold. The engine may be drawing too much current, check the specification of the car battery.

Error Code	Cause	Corrective Action
E08	Over-temperature during charging	Unplug from the AC Mains Charger and allow to cool down. Ensure that the charging area temperature is not excessive and that there is sufficient ventilation.
E09	Ambient temperature error	Remove the lithium booster from the area is it being charged, to allow it to heat up/cool down adequately before retrying.
E10	Failure of BMS (Battery Management System)	Contact SIP Customer Service for instruction, switch off the booster immediately and do not use in case of battery defects.
E11	Faulty charging circuit or charger	Ensure that only the supplied Mains Charger is used. Ensure that there is a secure connection between both the AC Charging Port (8) and the mains electrical supply socket. Ensure that the wall socket is functional.
E12	Faulty internal batteries	Contact SIP Customer Service immediately for advice and do not attempt to use the lithium booster.

If any of the above methods fail to solve the error then please contact SIP Customer Service for further advice.

9.1 Exploded Drawing and Parts List

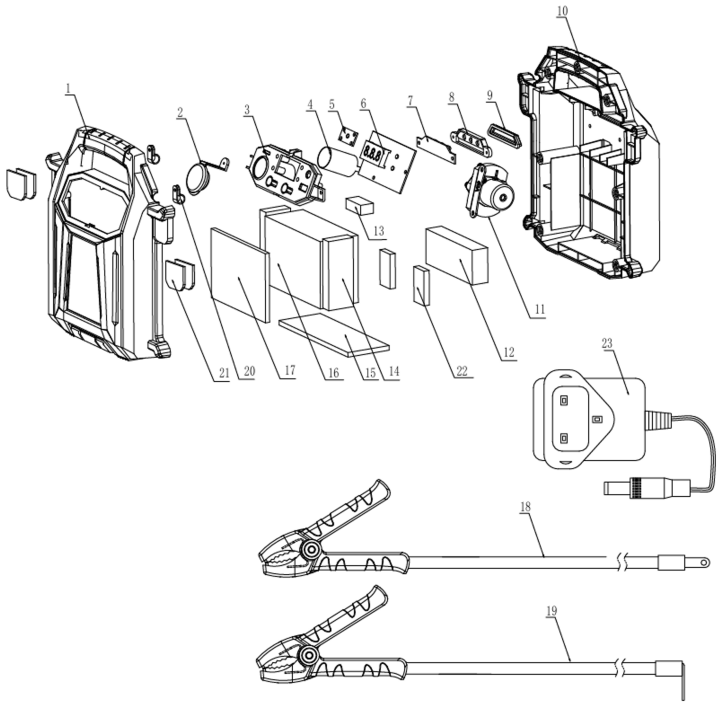

Ref No	Description	SIP Product Code
1	Case front	BA05-00001
2	Cigarette lighter protective cover	BA05-00002
3	Control panel	BA05-00003
4	Cigarette lighter (negative terminal)	BA05-00004
5	Cigarette lighter (positive terminal)	BA05-00005
6	Main PCBA	BA05-00006

Ref No	Description	SIP Product Code
7	LED work light PCBA	BA05-00007
8	LED work light reflector	BA05-00008
9	LED work light reflector screen	BA05-00009
10	Case back	BA05-00010
11	DC contactor	BA05-00011
12	Black soft foam with adhesive backing (125 x 50 x 25 mm)	BA05-00012
13	Black soft foam with adhesive backing (50 x 25 x 25 mm)	BA05-00013
14	Black soft foam with adhesive backing (50 x 25 x 15 mm)	BA05-00014
15	Black soft foam with adhesive backing (140 x 50 x 5 mm)	BA05-00015
16	LFP battery 12.8 V 4 AH (16000 mAH)	BA05-00016
17	Black high-density foam (140 x 75 x 5 mm)	BA05-00017
18	Black (negative) battery clamp cable	BA05-00018
19	Red (positive) battery clamp cable	BA05-00019
20	Cable clip CC-42	BA05-00020
21	Rubber pad for clamp grip	BA05-00021
22	Black foam with adhesive backing (75 x 30 x 12 mm)	BA05-00022
23	UK plug charger 1A	BA05-00023

10 UK - Declaration of Conformity

We, SIP (Industrial Products) Ltd, Gelders Hall Road, Shepshed, Loughborough, Leicestershire, LE12 9NH, United Kingdom

As the manufacturer within the UK, England, Scotland and Wales, declare that the

SIP STARTMASTER® 2500A 12V Lithium Jump Starter - 07221

Conforms to the requirements of the following regulation(s), as indictated:

Electrical Equipment (Safety) Regulations 2016

Electromagnetic Compatibility Regulations 2016

The Restriction of the Use of Certain Hazardous Substances in Electrical and Electronic Equipment Regulations 2012

And the relevent designated standard(s), including:

BS EN IEC 61558-1:2019
BS EN 61558-2-16:2009/A1:2013
BS EN 55014-1:2021
BS EN 55014-2:2021
BS EN IEC 61000-3-2:2019+A1:2021
BS EN 60335-1:2012+A11:2014+A13:2017+A1:2019+A14:2019+A2:2019+A15:2021+A16:2023
BS EN 1012-1:2010
BS EN 62233:2008
BS EN IEC 61000-3-2:2019+A1:2021+A2:2024
BS EN 61000-3-3:2013+A1:2019+A2:2021
BS EN 55032:2015+A11:2020+A1:2020
BS EN 55035:2017+A11:2020
BS EN IEC 55015:2019+A11:2020
BS EN IEC 61547:2023

Mr. P Ippaso - Managing Director
SIP (Industrial Products) Ltd
Date: 20/05/2026

11 EU - Declaration of Conformity

We, SIP (Machinery Europe) Ltd, ASM, Block One, Quayside Business Park, Dundalk, County Louth, A91 DP8R, Republic of Ireland

As the manufacturer's authorised representative within the EC, declare that the

SIP STARTMASTER® 2500A 12V Lithium Jump Starter - 07221

Conforms to the requirements of the following directive(s), as indictated:

2014/35/EU	Low Voltage (LVD) Directive
2014/30/EU	Electromagnetic Compatibility (EMC) Directive
2011/65/EU	Restriction of Hazardous Substances (RoHS) Directive

And the relevent harmonised standard(s), including:

EN IEC 61558-1:2019
EN 61558-2-16:2009/A1:2013
EN 55014-1:2021
EN 55014-2:2021
EN IEC 61000-3-2:2019+A1:2021
EN 60335-1:2012+A11:2014+A13:2017+A1:2019+A14:2019+A2:2019+A15:2021+A16:2023
EN 1012-1:2010
EN 62233:2008
EN IEC 61000-3-2:2019+A1:2021+A2:2024
EN 61000-3-3:2013+A1:2019+A2:2021
EN 55032:2015+A11:2020+A1:2020
EN 55035:2017+A11:2020
EN IEC 55015:2019+A11:2020
EN IEC 61547:2023

Mr. P Ippaso - Managing Director
SIP (Machinery Europe Ltd)
Date: 20/05/2026

12 Notes

Please dispose of packaging for the product in a responsible manner. It is suitable for recycling. Help to protect the environment, take the packaging to the local amenity tip and place into the appropriate recycling bin.

Never dispose of electrical equipment or batteries in with your domestic waste. If your supplier offers a disposal facility please use it or alternatively use a recognised recycling agent. This will allow the recycling of raw materials and help protect the environment.

FOR HELP OR ADVICE ON THIS PRODUCT PLEASE CONTACT YOUR DISTRIBUTOR OR SIP DIRECTLY ON:

T: 01509 500400
E: sales@sip-group.com or customerservice@sip-group.com

SIP INDUSTRIAL

British Assessment Bureau
UKAS MANAGEMENT SYSTEMS
8289
ISO 9001
QUALITY MANAGEMENT

SIP (INDUSTRIAL PRODUCTS) LTD
Gelders Hall Road, Shepshed, Loughborough, Leicestershire, LE12 9NH, UK
www.sip-group.com

SIP (MACHINERY EUROPE) LTD
ASM, Block One, Quayside Business Park, Mill Street, Dundalk, Co. Louth, A91 DP8R, Ireland
www.sip-group.eu

Every reasonable effort has been made to present current and accurate information at time of print. However, SIP reserve the right to change catalogue details or product specifications without notice. Photographs are for illustration purposes only. E&OE. Contents & images are copyright © SIP Ltd. & cannot be reproduced without express written permission.